DWG STATUS					ZONE	REVISION HISTORY	AUTH	DR	APVD 1	APVD 2
DATE	STG	REV	N/P	CHG						
30JN16		00				SOE PMV B24LS	5035198	S.X	CNZ	ZOO

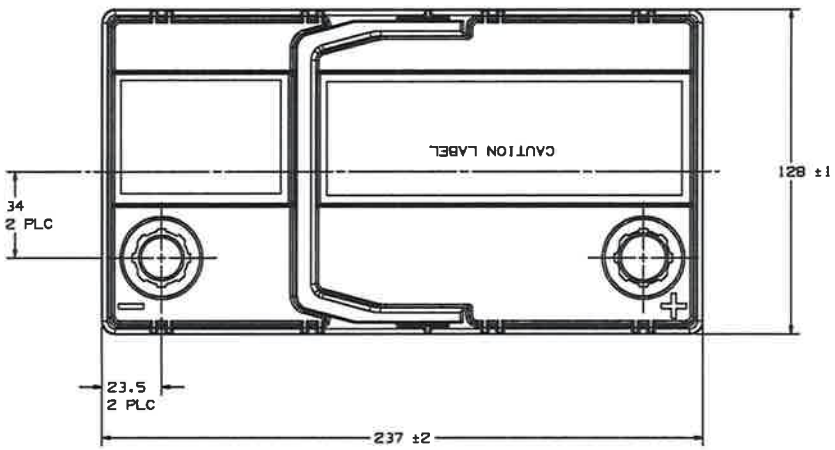

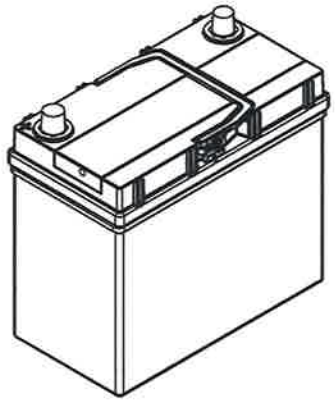

SCALE 1:2

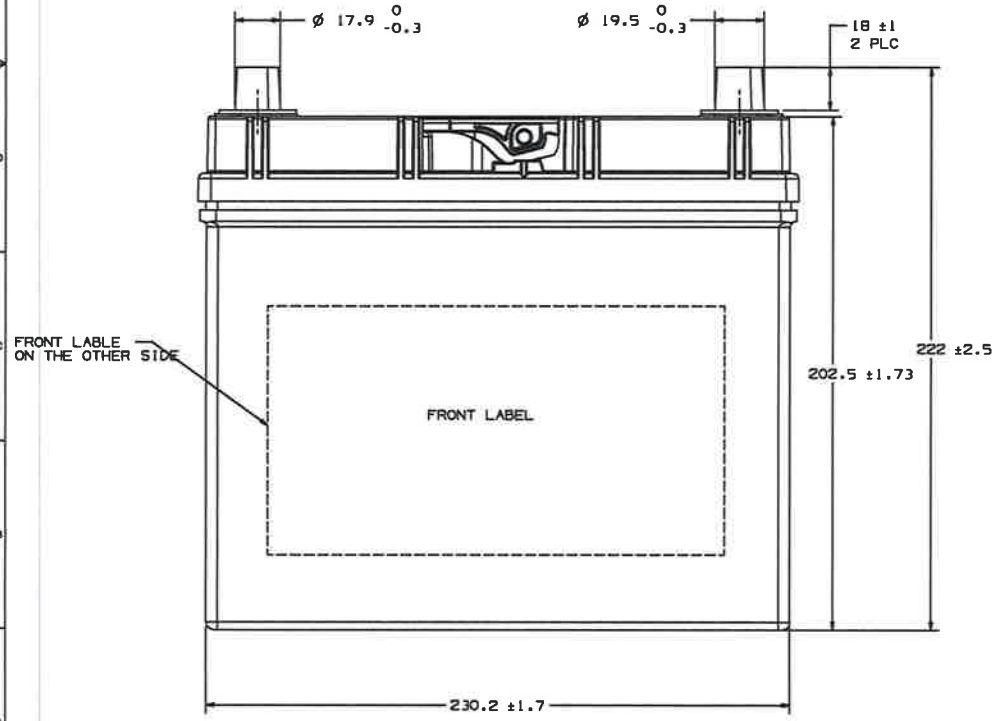

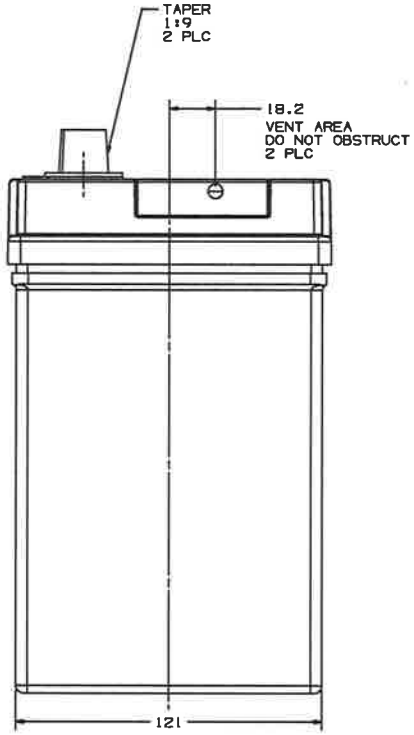

上海JCI工程部核准章
审核 [signature] 日期 2016.7.1
批准 [signature] 日期 7/1.2016

APPLICATION DATA

CAT. NO. 6-QW-45(380)-L 12 VOLTS

Ref Name: 55B24LS

GROUP SIZE: BCI____ JIS B24 EN__

PERFORMANCE RATINGS:

RESERVE CAPACITY AT 27°C: MINUTES ____ MIN

COLD CRANKING AMPERES AT -18°C 380 AMPS

20 HOUR RATE: AMP HR 45 AH

RECOMMENDED MAXIMUM CHARGING OR OPERATING TEMPERATURE 52 °C

INSTALLATION INSTRUCTIONS:

RECOMMENDED TERMINAL TORQUE SPECIFICATIONS:

TOP TERMINAL POST 5.6-7.9 (N-m)

RECOMMENDED RETAINER TORQUE SPECIFICATIONS:

BASE CLAMP 15.0-20.0 (N-m)

TOP BAR/FRAME 2.3-4.5 (N-m)

UNLESS OTHERWISE SPECIFIED

THIS DOCUMENT IS IN ACCORDANCE WITH ASME Y14.5M-1994 AS AMENDED BY THE GM GLOBAL DIMENSIONING AND TOLERANCING ADDENDUM-1997. ALL GEOMETRIC TOLERANCES AND RELATED DATUMS APPLY RFS. RULE #1 (PERFECT FORM AT MMC) DOES NOT APPLY WHEN RELATIONSHIP BETWEEN FEATURES IS ESTABLISHED BY ORIENTATION OR LOCATION TOLERANCES. SEPARATE POSITION CALLOUTS MAY BE GAGED SEPARATELY REGARDLESS OF DATUM REFERENCES.

ALL DIMENSIONS ARE IN MILLIMETERS

ZERO PLACE DECIMALS ± 1
ONE PLACE DECIMALS ± 0.5
TWO PLACE DECIMALS ± 0.15

ANGLES ± 1 DEGREE

REFERENCE

THIRD ANGLE PROJECTION

DO NOT SCALE
USE MATH DATA

Johnson Controls

JOHNSON CONTROLS BATTERY GROUP, INC.
CONFIDENTIAL AND PROPRIETARY INFORMATION

		DATE
DR	S.XU	30JN16
APVD1	CN.ZHANG	
APVD2	ZG.GAO	
APVD3		
APVD4		
APVD5		

MATERIAL

DRAWING NAME
B24L PMV T2

DRAWING NUMBER
30035422

SIZE	SCALE	FRAME NO	SHEET NO	STG	REV	N/P
A1	1:1	1 OF 1	1 OF 1		00	